Catalog sheet

VLK 04

Freestanding stainless steel sink for chemical toilets



VLK 04 is a robust freestanding stainless steel disposal sink with a ground anchoring frame. VLK 04 has two separate sections. The first, for emptying chemical toilets and cleaning their cassettes, has a specially shaped bowl for easy drainage, a hinged grating, a rinsing hose and a holder for the toilet cassette cap. The second, separate section on the other side supplies drinking water. It has a hose with a ball valve and a hose support. The sink includes explanatory pictograms.

The DN 100 waste outlet includes an odour trap within the unit and then runs downwards. The connecting waste pipe can therefore approach from any side. The water inlet connects via a G 1/2″ ball valve.

The sink can be removed for winter to prevent water-containing parts from freezing and being destroyed.

The sink is made of AISI 304 stainless steel (other materials to order). For the care of stainless steel products, we recommend specialist products designed for this material.

Complete delivery

- Sink bowl with cladding and rear panel
- Hinged grating
- Bib taps and hoses (2 pcs)
- Connection hose
- G 1/2″ valve with filter
- Hose bracket
- Anchoring frame
- HT waste outlet with odour trap

Available variants

- VLK 04 Freestanding stainless steel disposal sink for chemical toilets

Technical details

Overall dimensions	1250 x 660 (740 with bracket) x 600 mm
Internal bowl dimensions	500 x 500 x 300 mm
Waste outlet	DN 100
Waste outlet bore	95 mm
Weight	40 kg
Water inlet	G 1/2"
Water outlet	G 3/4" (1x with hose)

AZP Brno s.r.o.
U Sýpky 555, CZ-664 61 Rajhradice
tel +420 545 428 911
mob +420 602 570 068
IČ 46973150 | DIČ CZ46973150
KOS v Brně – oddíl C, vložka 7425
e-mail azp@azp.cz
www.azp.cz

Construction readiness requirements

- Set-up opening in the ground for installing the anchoring frame.
- Set-up waste outlet DN 100 as shown in the diagram.
- Set-up water inlet G 1/2" as shown in the diagram.

Diagram

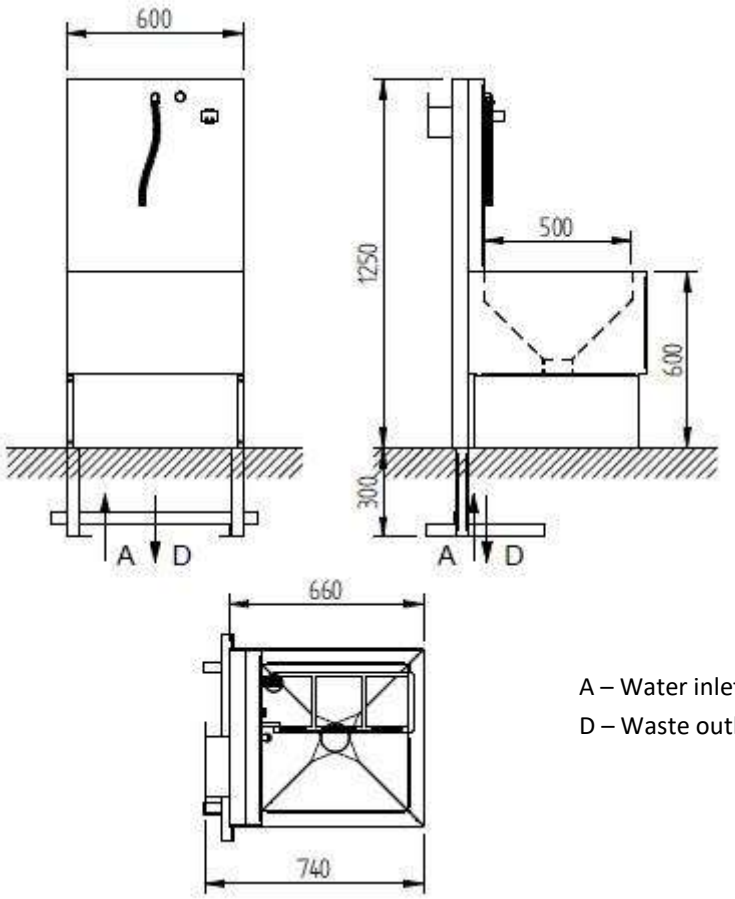

A – Water inlet G 1/2"
D – Waste outlet DN 100