Catalog sheet

AUS 2, AUS 2P

Automatic hot and cold water shower unit with thermostatic valve – sensor or piezo button operation

AUS 2 is an automatic shower unit with a thermostatic valve, offering the benefit of touchless operation. The water is activated by briefly covering the sensor window. The water supply is controlled by a solenoid valve. By repeatedly covering the sensor, the water will stop. If the sensor is not covered again, the water stops automatically once the preset period has elapsed (opening time). The water temperature is adjusted using the thermostatic valve.



AUS 2P is a version of the shower unit operated using a durable piezo button. The user turns the water on and off by touching the button. If the user does not turn the water off, it stops flowing automatically after the preset period has elapsed (opening time).

The AUS 2 and AUS 2P shower units are particularly suitable for showers in workplaces, swimming pools, sports facilities, etc.
The showers are made of AISI 304 stainless steel. Other materials (e.g. AISI 316) are available to order. For stainless steel care, we recommend Würth products – preservation (order no. 0893 121 K), cleaning (order no. 893 121 1).

Complete delivery

- Installation box
- Inlet and outlet unions
- Stainless steel cover with electronics housing
- Ball valve
- Solenoid valve
- Thermostatic valve
- Mounting cover plate
- Connecting hose
- Small mounting parts

Available variants

- AUS 2 Automatic sensor-operated shower unit with thermostatic valve - 12V, 50 Hz
- AUS 2P Automatic shower unit with piezo button and thermostatic valve - 12V, 50 Hz

Technical details

- Sensor range — automatic
- Water inlet — G 1/2“
- Water pressure — 0.1 – 1.0 MPa
- Opening time — 5 – 100 s in 5 s steps (set to 15 s)
- Power supply — 12 V, 50 Hz
- Power consumption — 6 VA
- Power supply unit — ZAC 1/20 (max. 3 x AUS 2, AUS 2P)
  ZAC 1/36L (max. 6 x AUS 2, AUS 2P)
  ZAC 1/50 (max. 8 x AUS 2, AUS 2P)
- Weight — 3.5 kg

Construction readiness requirements

- Water pipework installed according to the diagram.
- Set-up recess of 285 x 165 x 70 mm for the installation box.
- Set-up cable for power supply 12 V, 50 Hz from the ZAC power supply unit.

Diagram

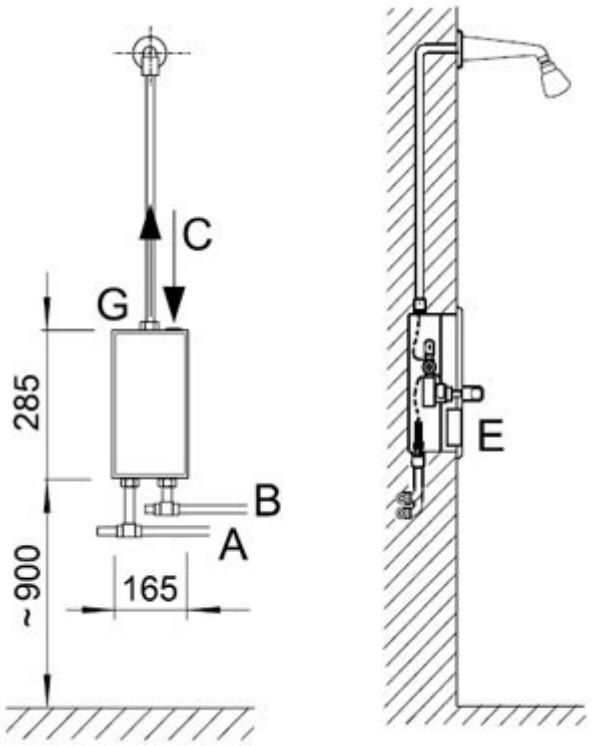

A – Cold water pipe, G 1/2" internal thread
B – Hot water pipe, G 1/2" internal thread
C – Power supply cable CYKY 2A x 1.5
E – Scanning zone/button
G – Water outlet to the shower unit