# Catalog sheet

## AUM 018 Low-profile wall-mounted stainless steel washbasin

**AUM 018** is a low-profile, all-stainless-steel wall-mounted washbasin designed for wall installation. It is suitable wherever installation depth is limited. The washbasin has a welded stainless steel siphon positioned at the rear to occupy as little space as possible. Its low profile, siphon position and recessed front edge improve user comfort and accessibility.

The washbasin is available separately as a standalone body with a tap hole **AUM 018 SO**, which can be fitted with any type of tap, or without a tap hole as **AUM 018 BO**.

Two further variants are based on the **AUM 018**. **AUM 018 INV** is a low-profile wall-mounted washbasin with grab bars for persons with disabilities and reduced mobility, while **AUM 018Z** is a low-profile wall-mounted washbasin with a concealed waste outlet. Both variants are available with a tap hole (**SO**) or without one (**BO**).



*AUM 018 SO*



*AUM 018 INV SO*

When fitted with grab bars and installed in accordance with applicable standards, the washbasin **AUM 018Z** is also structurally suitable for use in accessible sanitary facilities for persons with disabilities and reduced mobility.

The standard version is made of stainless steel grade ČSN 17 240 (AISI 304). On request, it can be made of AISI 316, which is suitable for environments with increased chlorine concentration. Würth products are recommended for the care of stainless steel products.



*AUM 018Z SO*

**Complete delivery**

- Stainless steel washbasin with siphon 1 pc
- Stainless steel washbasin with grab bars and siphon (AUM 018 INV only) 1 pc
- Cover (AUM 018Z only) 1 pc
- Anchoring material 1 pc

**Available variants**

- **AUM 018 SO** Low-profile wall-mounted washbasin with tap hole
- **AUM 018 BO** Low-profile wall-mounted washbasin without tap hole
- **AUM 018 INV SO**
  Low-profile wall-mounted washbasin with grab bars for persons with disabilities and reduced mobility, with tap hole
- **AUM 018 INV BO**
  Low-profile wall-mounted washbasin with grab bars for persons with disabilities and reduced mobility, without tap hole
- **AUM 018Z SO** Low-profile wall-mounted washbasin with concealed waste outlet and tap hole
- **AUM 018Z BO** Low-profile wall-mounted washbasin with concealed waste outlet, without tap hole

**Common technical details**

| | |
|---|---|
| Water inlet | G 1/2”, internal thread |
| Waste outlet | Pipe Ø 40 mm |
| Internal bowl dimensions | 520x470 mm |
| Tap hole (only for variants designated SO) | Ø 33 mm |
| Weight AUM 018 | 11,6 kg |
| Weight AUM 018 INV | 12,5 kg |
| Weight AUM 018Z | 14,00 kg |

**Construction readiness requirements**

Set-up water inlet: G 1/2” internal thread.
Set-up waste outlet for pipe d=40 as shown.

## Diagram

### AUM 018 SO and AUM 018 BO

The diagram below applies to both the SO and BO washbasin variants in terms of dimensions and shape. The BO variant has no tap hole.

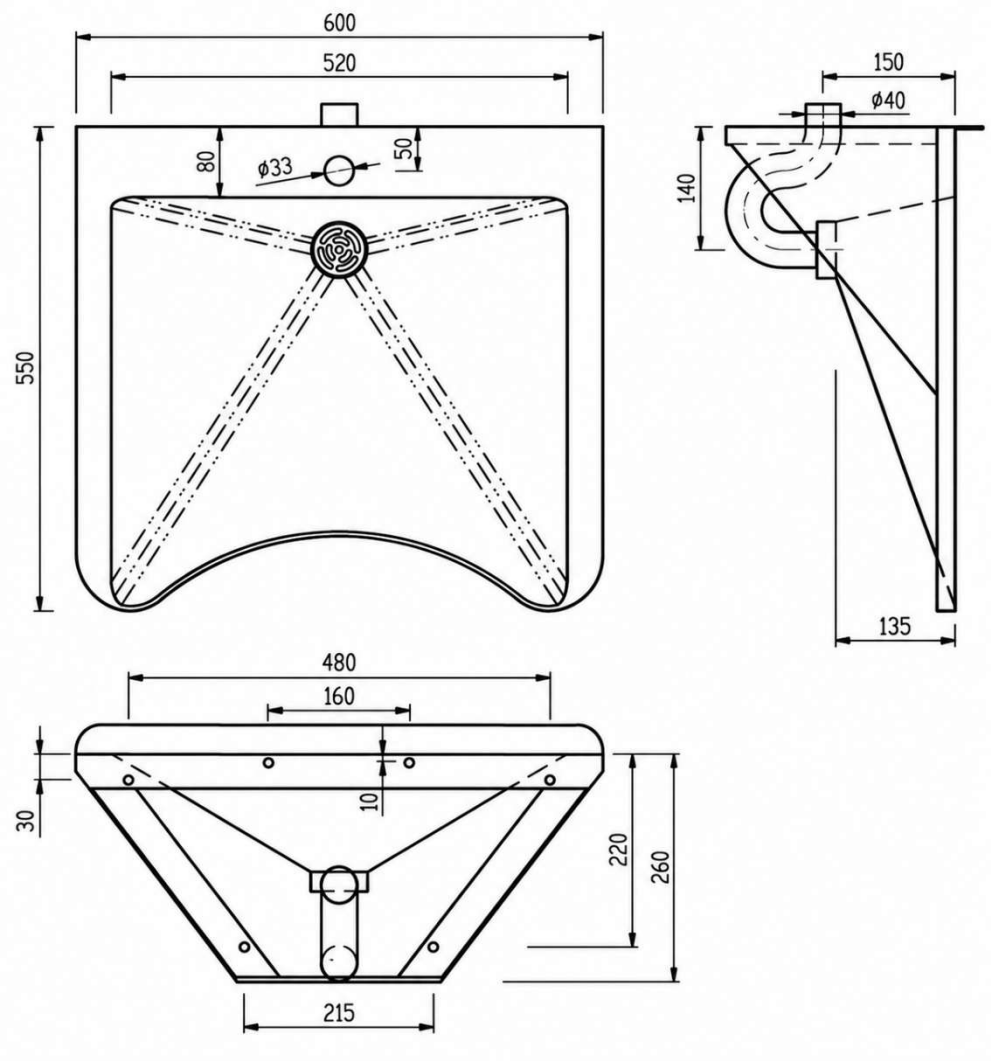

**AUM 018 INV SO and AUM 018 INV BO**

The diagram below applies to both the SO and BO washbasin variants in terms of dimensions and shape. The BO variant has no tap hole.

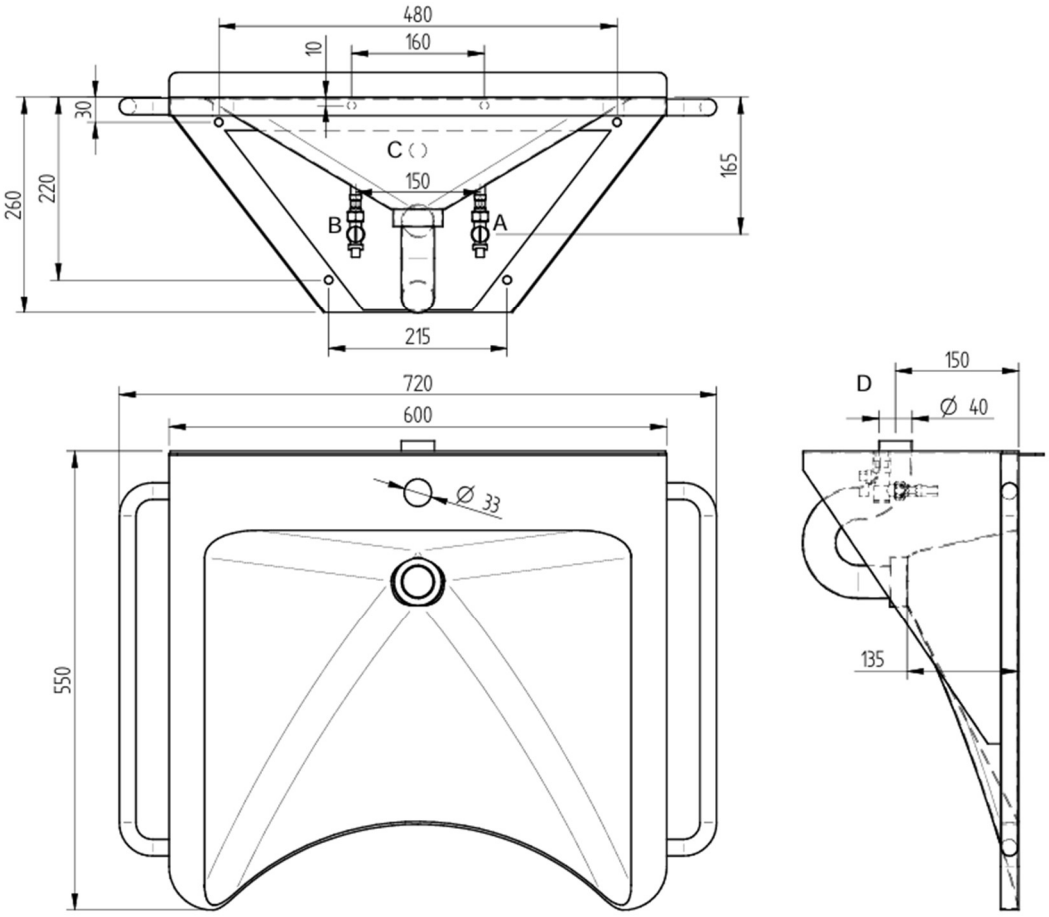


A, B – Water inlet, G1/2" internal-thread pipe

D – Waste outlet (d = 40 mm)

**AUM 018Z SO and AUM 018Z BO**

The diagram below applies to both the SO and BO washbasin variants in terms of dimensions and shape. The BO variant has no tap hole.

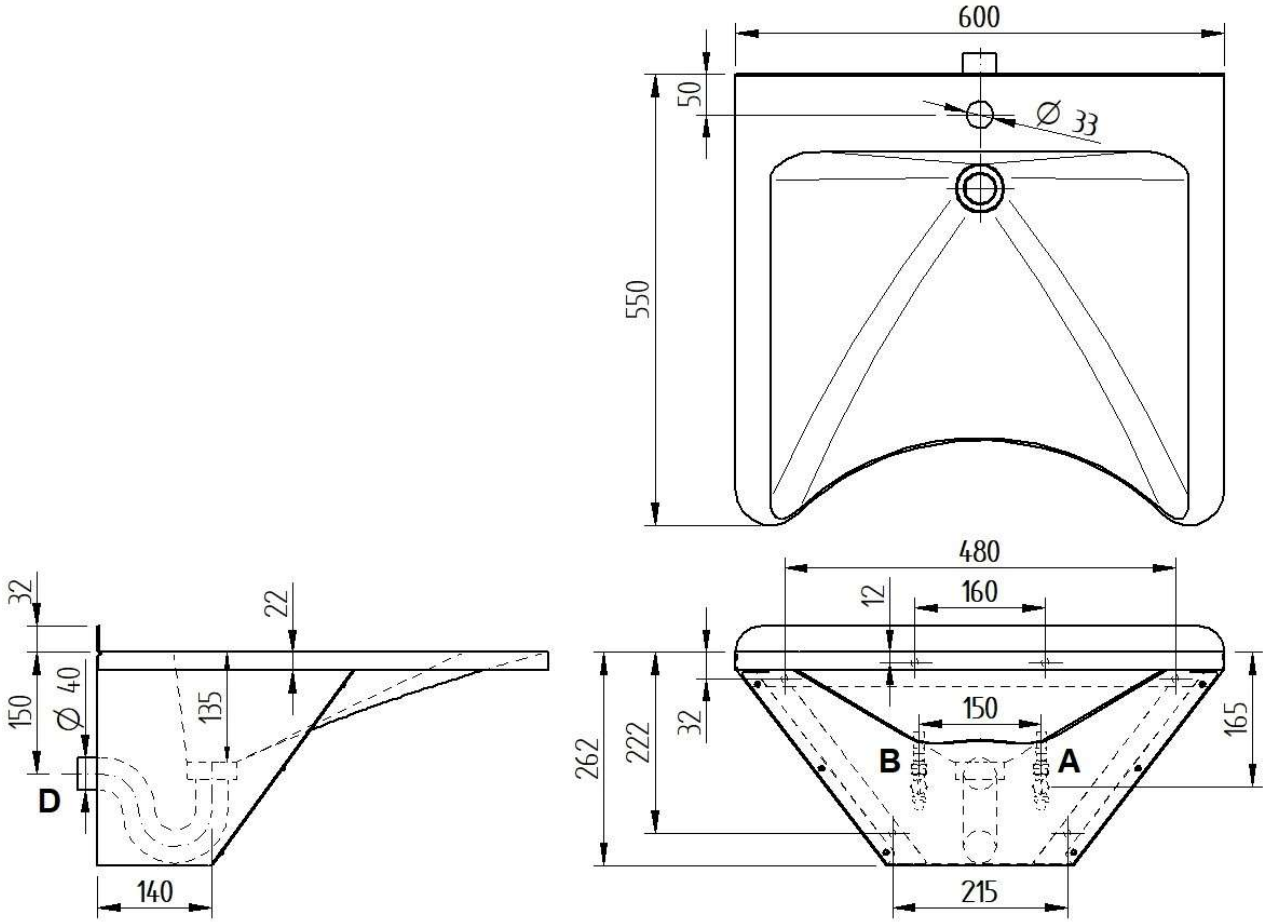


A, B – Water inlet, G1/2" internal-thread pipe

D – Waste outlet (d = 40 mm)