Installation and operating instructions

AUM 018Z wall-mounted washbasin with concealed waste; 1222101320 with faucet hole, 1222101330 without faucet hole

Description of the washbasin

- The washbasin is made entirely of stainless steel and is designed for wall mounting. Depending on the version, a deck-mounted washbasin faucet can be used – AUM 018Z SO, or a wall-mounted faucet – AUM 018Z BO.

Installation of the washbasin

Site preparation for installation

1. Water supply installed and terminated with a 1/2" female thread.
2. Waste outlet prepared for a d = 40 mm pipe according to the diagram.

Mounting the washbasin

1. Remove the front cover of the washbasin.
2. For the washbasin version with a faucet hole, install a suitable faucet in accordance with the faucet manufacturer's instructions.
   * Mechanical faucets must have an extended operating lever so that they can be operated easily by a person with reduced mobility. *
3. Insert the siphon outlet into the prepared waste pipe in the wall.
4. Level the washbasin horizontally and mark the anchoring points.
5. Drill the holes, insert the wall plugs and screw in the hanger bolts with a metric threaded end.
6. Place the washbasin on the prepared hanger bolts and tighten it with the nuts.
7. For the washbasin version fitted with a deck-mounted faucet, connect and, if necessary, adjust the faucet in accordance with the manufacturer's instructions.
8. Check all connections for leaks and proper operation, then install the front cover of the washbasin.

Supplied components

stainless steel cladding 1 pc
cover 1 pc
anchoring material 1 set

Model variants:

1222101320 AUM 018Z SO wall-mounted washbasin with concealed waste; with faucet hole

1222101330 AUM 018Z BO wall-mounted washbasin with concealed waste; without faucet hole

AZP Brno s.r.o.
U Sýpky 555, CZ-664 61 Rajhradice
tel +420 545 428 911
mob +420 602 570 068
IČ 46973150 | DIČ CZ46973150
KOS v Brně – oddíl C, vložka 7425
e-mail azp@azp.cz
www.azp.cz

Diagram:

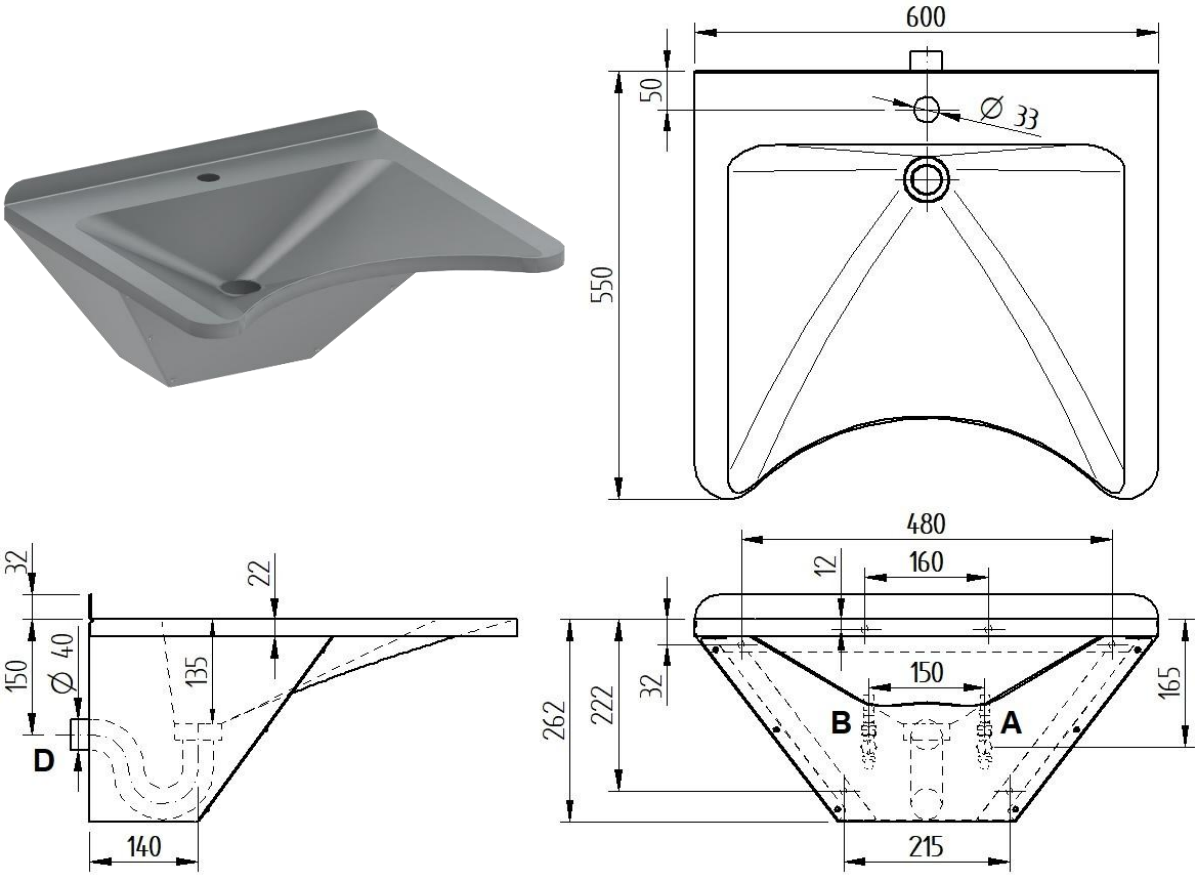

Cleaning and maintenance

- The unit is made of stainless steel grade ČSN 17 240 (AISI 304) and must not be operated in chemically aggressive environments.
- **!! Do not use cleaning agents containing chlorine !!**
- If the washbasin is made of stainless steel grade ČSN 17 346 (AISI 316), the concentration of dissolved free chlorine must not exceed 0.1 mg/l.
- Recommended products are Innosoft B 570 or WÜRTH products:
  - metal restoring agent
  - stainless steel care spray.
- Any cleaning or installation method not specified here is not permitted.

Warning

- If the products are used in areas where black (carbon) steel is processed, particles deposited on the stainless steel surface may cause corrosion.
- The surface must therefore be cleaned regularly to remove potential corrosion sites.