Installation and operating instructions

VLK 04 - stainless steel bucket sink for chemical toilets – floor mounted

BASIC TECHNICAL DATA

Water supply	G 1/2"
Water drainage	G 3/4"
Drain - internal diameter	95 mm
Overall dimensions	1250x660 (740 with bracket) x 600
Utility sink internal dimensions	500x500x300
Weight:	40 kg
Weblink	VLK 04

Intended use

- VLK 04 is a stainless drain intended for camps, gas stations and highway rest areas for chemical toilet, van waste tank, and other mobile device emptying.
- The stainless waste disposal unit is installed on level surfaces. The waste drain must be installed into the disposal floor.
- A part of the unit is a bracket for the installation of a hose with a ball valve. A part of the delivery is a 3 metres long hose serving for potable water refilling. On its front side, the unit is fitted with an approximately 1/2 m long hose connected to a squeeze valve. It is used for flushing the inside of the drain after use.

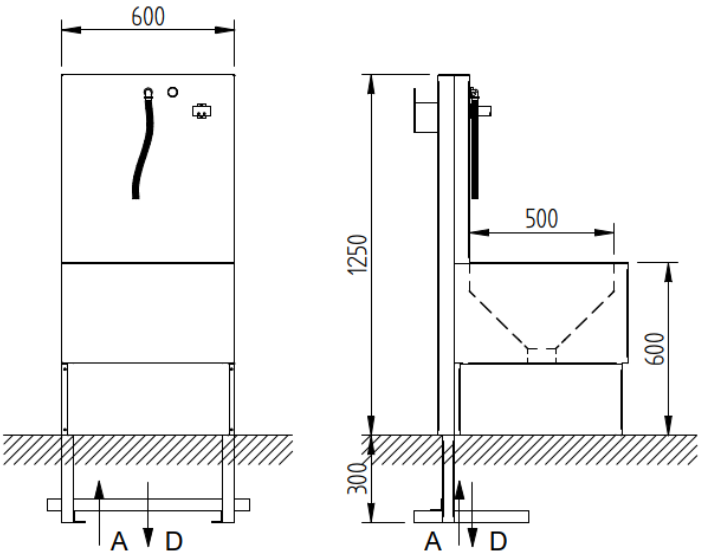

Installation

Structural preparations

1. Tr 1/2“ water supply prepared according to the illustration
2. 110 mm drain prepared

Bucket sink installation

1. Remove the 4 bolts of the rear cover (accessible after the removal of rubber caps)
2. Remove the supporting structure (4 screws M6).
3. Set the supporting structure in concrete. Connect the drainage (d 110 mm) and water pipes (G 1/2“) to the prepared sleeves. The structure must be installed in vertical position and the lower edge of the partition must be level with the ground.
4. Bolt the drain onto the support structure

A – water inlet G 1/2"

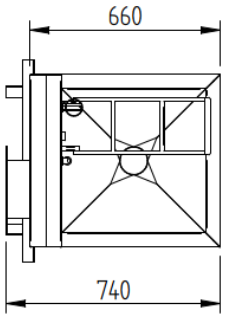

5. Create a siphon from the supplied elbows and connect it to the drainage pipe.
6. Install the rear cover, secure it with bolts and seal the holes.

Complete supply

- drain sink with casing and rear panel
- discharge valves - 2 pcs (1x timer squeeze valve and 1x ball valve)
- connecting hose
- angle valve with a filter
- fitting material
- hose bracket + hose
- anchor structure

Note

- **The sink is not intended for all-year operation. Water must be drained from the sink before winter to prevent damage to the valves**

Maintenance and cleaning

- The device was made from the stainless steel of quality corresponding with ČSN 17 240 (AISI 304) standard and, therefore, it must not be operated in chemically-aggressive environment.
- Preparations containing chlorine must not be used for its cleaning!!
- Cleaning agents by WÜRTH are recommended:
  - Metal renewal agent - Order No. 893 121 1
  - Stainless steel spray treatment - Order No. 0893 121 – K.
- If corrosion has already occurred, it can be removed with a cleaner INNOSOFT B 570 from the company Emergo.