Installation and operating instructions

AUS 2 - Automatic sensor-controlled subsurface shower unit with thermostatic valve

BASIC TECHNICAL DATA

Range:	sets automatically when switched on
Power voltage:	12 V, 50 Hz
Power input:	6 VA
Adjustable opening time:	5 – 100 s (set by manufacturer 15 s, step 5 s)
Water pressure:	0.1 – 1.0 MPa
Recommended power supply:	ZAC 1/20 (max. 3 x AUS 2) ZAC 1/50 (max. 3 x AUS 2)
Weblink:	AUS 2

Function of automatic shower unit

- After a short shading of the sensor (waving a hand in the scanning zone), the control electronic is activated and electromagnetic valve is opened immediately. After repeat shading of the sensor the electromagnetic valve is closed and the water stops flowing. When repeat shading does not occur, then the water stops flowing automatically after the adjusted time (the time of taking a shower).
- The temperature of the outflow water can be adjusted by thermostatic valve which is equipped with a safety pin for temperature of 38°C, higher temperature can be adjusted after its locking off.

Installation

Requirements for setting up construction

1. A 170 x 290 x 70 mm alcove in the wall.
2. Set up the water supply into the alcove ending with 1/2" cap nuts.
3. A filter must be set up in the water inlet to the shower unit or group of shower units for removing mechanical dirt from the water.
4. Set up cable CYKY 2A x 1,5 from the source of power supply ZAC to the alcove.
5. Set up the water inlet to the shower arm, ending with outer bolting for SP 1, ending with ½" inner bolting for SP 2.
6. Set up the assembly box and cover it with the metal assembly plate to protect against the entry of dirt.
7. Finished tiles.

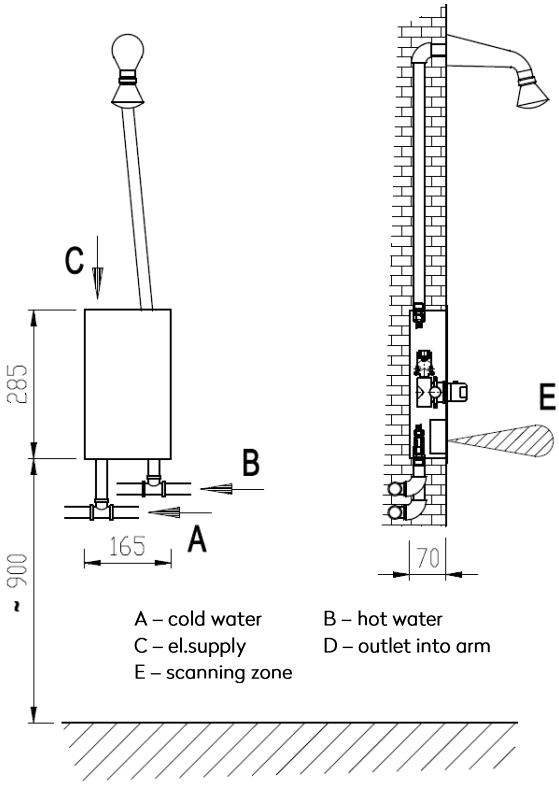

Assembly

1. Remove the covering metal assembly plate. Screw the flexible hose to the inlet and outlet bolting. Outlet hose connect to the electromagnetic valve, inlet hose connect to the thermostatic valve in the way that the inlet of hot water is connected to the red marked inlet and the inlet of the cold water to the blue marked inlet. The thermostatic valve will not work after incorrect connection!

2. Connect electronics to the source of power supply ZAC 12V, 50 Hz. Switch on the supply voltage. The pilot light will blink 6 times and then automatic setting up is finished, which is indicated by the quick blinking of the pilot light – max. 10 sec.
   The space in front of the photocell sensor must be free while being adjusted - do not screen the sensor!
   If an obstacle is in front of the shower unit during setting-up, the small scanning zone will be adjusted after its removal (the scanning zone was automatically set up for this obstacle). It is necessary to switch the source of power supply on and off – automatic adjustment of sensitivity is carried out.
3. By means of silicon mastic fill the upper and lateral sides of the casket in order to prevent water leaking into the assembly box. The lower part of the casket does not have to be filled up. Screw the casket with the enclosed stainless steel screws.

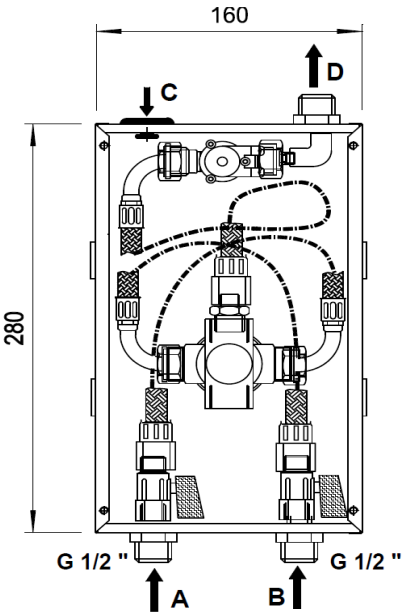

Notice

- AUS 2 automatic shower unit can be connected only to source of power supply ZAC; otherwise the manufacturer does not take responsibility for its reliable functioning and responsibility for eventual damage arising from connection to other voltages.
- Electrical connection must only be carried out by a qualified and competent worker.
- It is necessary to carry out an initial revision of electrical equipment before starting operation
- The user is obliged to carry out revisions of the electrical equipment during its operating life.

Explanation and delivery parts

1	assembly box	1 pc	7	stainless steel casing with electronics cabinet	1 pc
2	thermostatic valve	1 pc	8	inlet bolting	2 pcs
3	electromagnetic valve	1 pc	9	outlet bolting	1 pc
4	covering zinc-coated assembly plate	1 pc	10	angular connection with cup nuts	3 pcs
5	flexible hose	3 pc	11	stainless steel screw M4 x 25	4 pcs
6	stainless steel casket	1 pc	12	zinc-coated screw M4 x 12	2 pcs

Possible problems and their solution

Problem	Cause	Solution
After connecting to power supply the pilot light does not blink	Not connected to power supply Connected to 230 V	Connect it to ZAC power supply Irreparably destroyed
Not enough water flows	Jammed filter	Clean the filter
Water does not flow	Dirty sensor window	Clean the window
After connecting to power supply water flu only for set time – red pilot light is blinking	Obstacle infront of the sensor electronics is scanning this obstacle Scratched sensor window	Remove the obstacle Clean the window
Water flows constantly, electronics work properly	Dirt in electromagnetic valve	Clean the valve

Maintenance and cleaning

- The device was made from the stainless steel of quality corresponding with ČSN 17 240 (AISI 304) standard and, therefore, it must not be operated in chemically-aggressive environment and
- Preparations containing chlorine must not be used for its cleaning!!
- Cleaning agents by WÜRTH are recommended:
  - Metal renewal agent - Order No. 893 121 1
  - Stainless steel spray treatment - Order No. 0893 121 – K.
- If corrosion has already occurred, it can be removed with a cleaner INNOSOFT B 570 from the company Emergo.

Valve cleaning

- Unscrew the three screws holding the coil. Take off the coil, remove carefully the plastic core cover, (be careful not to lose the spring). Remove the membrane and clean the space under it. Check the permeability of both holes in the plastic centre of the diaphragm and assemble the valve. When reinstalling the valve, the direction of water flow must be observed – it is marked by an arrow on the valve.