Instructions for installation and use

AFO 02-II (-II D) – Stainless steel free-standing drinking fountain (indoor/outdoor)

BASIC TECHNICAL INFORMATION

Water inlet:	G 1/2“
Water pressure:	0,2 – 0,6 MPa – recommended 0,3 MPa
Outlet:	Pipe d = 40 mm
Inner dimensions of the sink:	D= 220 mm
Dimensions:	1000 x 230 mm
Weight:	20/15 kg
Weblink:	AFO 02-II (-II D)

Description

- AFO 02-II (-II D) is an anti-vandal drinking fountain with an attractive design and easy operation – fitted with push valve. The water flows only when the valve is pressed. Water supply is made with flexible hose finished with spherical valve. Flexible inlet and outlet connections enable variable fixing of fountain.

Installation

Requirements for setting up the construction

1. Set-up water supply pipe G ½“ and outlet d 40 mm (D) within the space defined by the d 120 mm (D) pipe – both at the level of the anchoring construction upper edge – i.e. approximately 120 mm above the surrounding ground level. The water supply pipe must be fitted with a filter to remove impurities from the water, which significantly increases reliability of the push valve.
2. Assembly of the anchoring construction using the supplied L-profiles and mounting parts. Concrete embedding of the anchoring construction as show on the picture. The top edge of the pipe must be horizontally levelled.

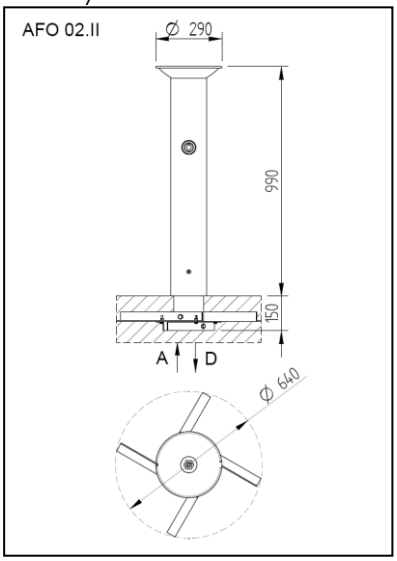

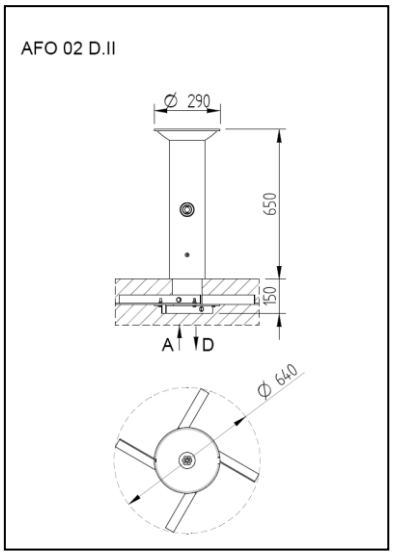

Assembly

1. Connect the supply hose with a ball valve to a water supply.
2. Connect the flexible waste hose to the waste pipe – if necessary, an odour stop can be made by suitable bending of the hose.
3. Use the ball valve to adjust the flow rate in the nozzle.
4. Fit the foot of the drinker onto the concrete base structure – beware of possible pinching.

Package contents

- stainless steel column and cone with nozzle
- press valve
- anchoring construction
- flexible hose siphon
- connecting hoses
- anchoring material

Note

- **When located outdoor, it is necessary to drain water from the fountain before the winter season. Blow out all the water (also from the push valve) using pressure air, or unscrew the fountain from the anchor flange and store it in the area with non-freezing temperature. Should the water freeze in the push valve, the valve is irreparably damaged.**

Maintenance and cleaning

- The device is made of stainless steel according to ČSN 17 240 (AISI 304) and must not be installed in a chemically aggressive environment.
- !! Chlorine products must not be used to clean the product!!
- Recommended WÜRTH cleaning products:
    - Metal restoration agent – Article No. 893 121 1
    - High-grade steel care spray – Article No. 0893 121 K.
- Any other method of cleaning/installing the system is not permitted.
- A filter (sieve of 100 µm) must be used in water inlet to remove mechanical dirt off water! By this way push valve reliability be increased. **Latter claims because of internal mechanism damaging will not be accepted!**